Fusion Series	2000 WOG	CS	Super-Tek Seat
FIRESAFE PER API 607-5			SIZE 3/4"

T23-CS-F-G-G-L-020

Scan me

QR CODE

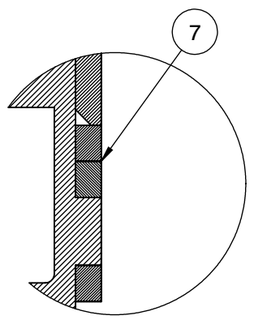

DETAIL C

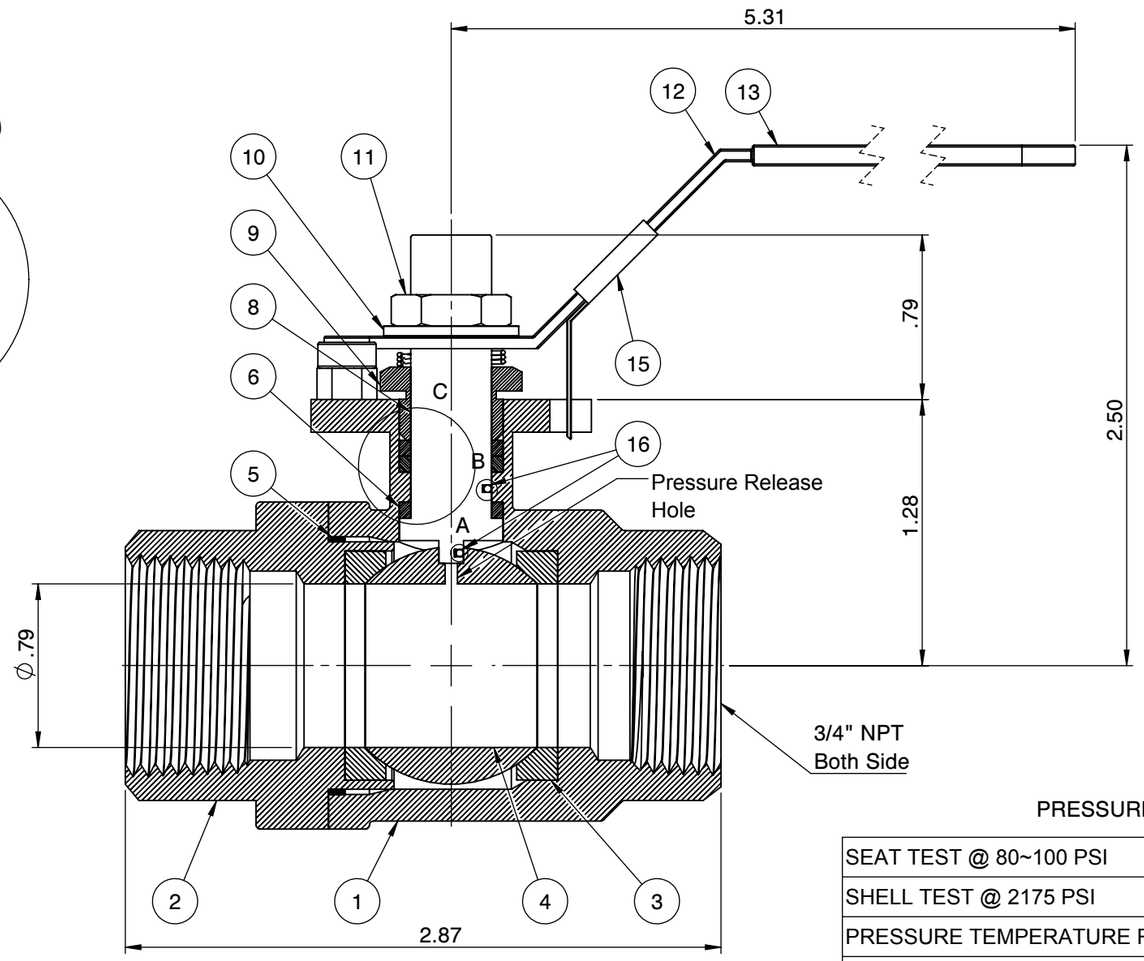

Actuator ISO Mounting Flange (F04)

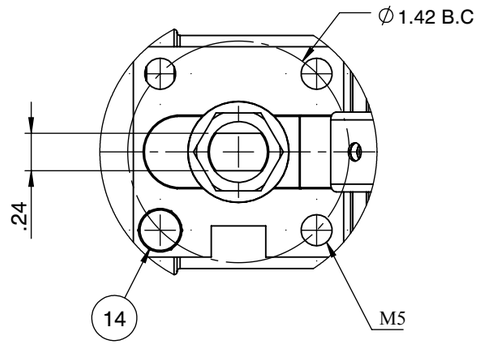

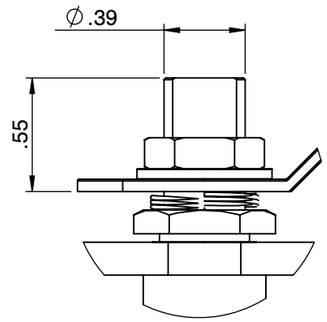

CS:	Flo-Tite T23CS WCB	3/4" 2000 WOG

1/4" - 1" Body marking

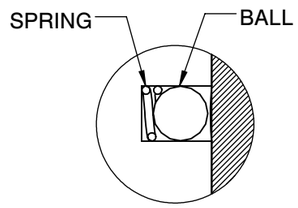

DETAIL : A
DETAIL : B

No.	Parts	Material
1	Body	ASTM A216 WCB
2	End Cap	ASTM A216 WCB
3	Seat	Super-Tek
4	Ball	ASTM A351 CF8
5	Gasket	Graphite
6	Thrust Washer	TFM
7	Stem Packing	GRAPHITE
8	Stem	A276-304 / 17-4PH
9	Gland	SS304
10	Handle Washer	SS304
11	Handle Nut	SS304
12	Handle	Zinc Plated Steel
13	Handle Cover	PVC
14	Stop Screw	Steel
15	Locking Device	Zinc Plated CS
16	Anti-Static Device	SS304

PRESSURE RATING 2000 WOG

SEAT TEST @ 80~100 PSI	ASME B16.34
SHELL TEST @ 2175 PSI	ASME B16.34
PRESSURE TEMPERATURE RATING	ASME B16.34
END CONNECTION	ASME B16.11
JOINT STRENGTH	ASME B16.34
WALL THICKNESS	ASME B16.34
BASIC DESIGN	ASME B16.34

FOR CERTIFIED DRAWING CONSULT FACTORY						
	Drawn by :	M	Date : June 14, 2019	Scale : Not To Scale	Rev : 0	Drawing Title: NPT 3/4" FULL PORT BALL VALVE
	Checked by :	M	Date : June 14, 2019	Unit : Inch	Sheet : xxx	Drawing No.: DT-T23CSFGGL020
	Approved by :	M	Date : June 14, 2019	Material : See Notes		

FLO-TITE™
4815 W. 5th Street
Lumberton, NC 28358
Website: www.flotite.com
Tel : 910-738-8904
Fax : 910-738-9112
E-mail : flotite@flotite.com

REVIEW ALL STANDARD SOFT PARTS FOR APPLICATION COMPATIBILITY