Fusion Series	1500 WOG	CS	Super-Tek Seat
NON FIRESAFE PER API 607-5			SIZE 2-1/2"

T23-SS-F-F-G-L-065

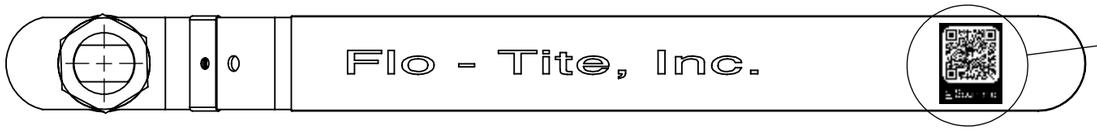

Scan me

QR CODE

Actuator ISO Mounting Flange (F10)

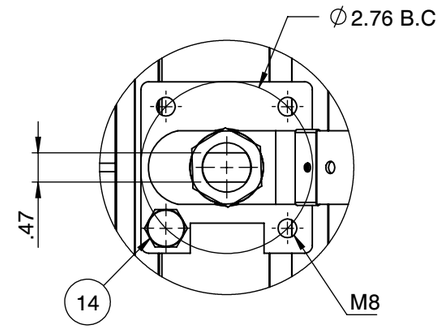

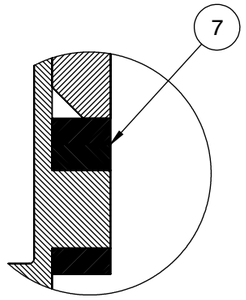

DETAIL C

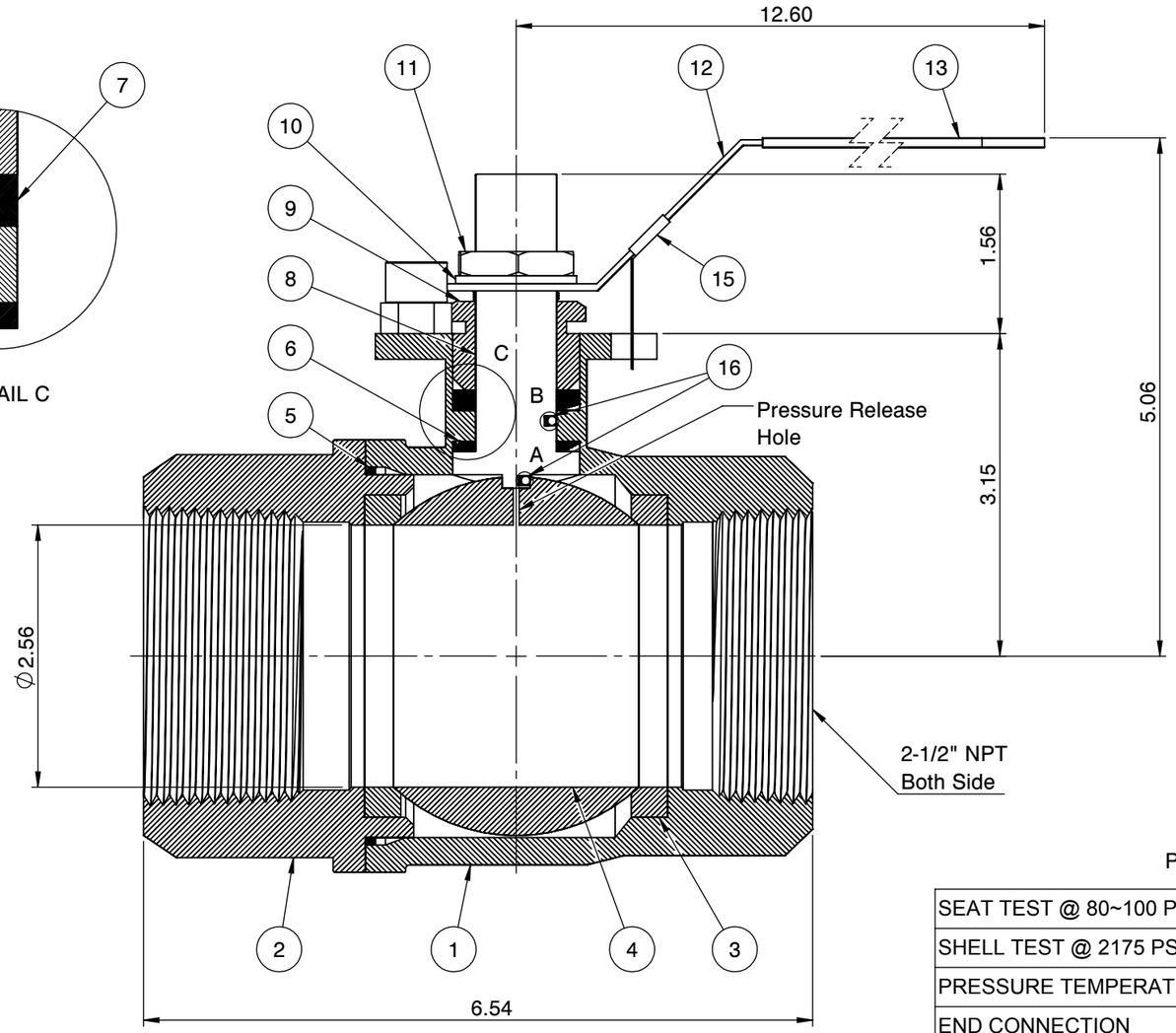

SS: Flo-Tite T23SS

2-1/2" CF8M 1500 WOG

2-1/2" - 4" Body marking

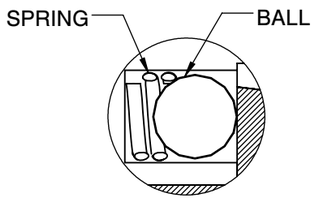

DETAIL : A
DETAIL : B

PRESSURE RATING 1500 WOG

SEAT TEST @ 80~100 PSI	ASME B16.34
SHELL TEST @ 2175 PSI	ASME B16.34
PRESSURE TEMPERATURE RATING	ASME B16.34
END CONNECTION	ASME B16.11
JOINT STRENGTH	ASME B16.34
WALL THICKNESS	ASME B16.34
BASIC DESIGN	ASME B16.34

No.	Parts	Material
1	Body	ASTM A351 CF8M
2	End Cap	ASTM A351 CF8M
3	Seat	Super-Tek (TFM 1600)
4	Ball	ASTM A351 CF8M
5	Gasket	Graphite
6	Thrust Washer	TFM
7	Stem Packing	TFM
8	Stem	A276-316 / 17-4PH
9	Gland	SS304
10	Handle Washer	SS304
11	Handle Nut	SS304
12	Handle	SS304
13	Handle Cover	PVC
14	Stop Screw	SS304
15	Locking Device	SS304
16	Anti-Static Device	SS316

FOR CERTIFIED DRAWING CONSULT FACTORY						
	Drawn by :	M	Date : June 21, 2019	Scale : Not To Scale	Rev : 0	Drawing Title: NPT 2-1/2" FULL PORT BALL VALVE
	Checked by :	M	Date : June 21, 2019	Unit : Inch	Sheet : xxx	Drawing No.: DT-T23SSFFGL065
	Approved by :	M	Date : June 21, 2019	Material : See Notes		

FLO-TITE™
4815 W. 5th Street
Lumberton, NC 28358
Website: www.flotite.com
Tel : 910-738-8904
Fax : 910-738-9112
E-mail : flotite@flotite.com

REVIEW ALL STANDARD SOFT PARTS FOR APPLICATION COMPATIBILITY