Tri-Pro Series 2250WOG WCB Metal Seat FULL PORT

FIRE SAFE API 607-7 Size 1/4" - 4"

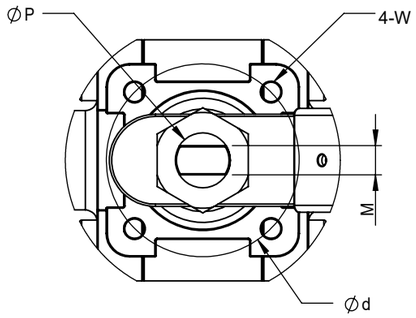

SIZE	A	C	C1	D	E1	F1	d	K	L	M	P	W	ISO
1/4"	4.81	2.80	1.54	6.57	0.46	0.71	1.65	0.28	0.53	0.25	0.47	#10-24UNC	F04
3/8"	4.81	2.80	1.54	6.57	0.50	0.71	1.65	0.28	0.53	0.25	0.47	#10-24UNC	F04
1/2"	4.89	2.80	1.54	6.57	0.59	0.85	1.65	0.28	0.53	0.25	0.47	#10-24UNC	F04
3/4"	5.17	2.95	1.70	6.57	0.79	1.07	1.65	0.28	0.53	0.25	0.47	#10-24UNC	F04
1"	5.24	3.62	2.06	7.95	0.98	1.34	1.97	0.44	0.74	0.315	0.55	1/4-20UNC	F05
1-1/4"	5.72	3.74	2.19	7.95	1.26	1.69	1.97	0.44	0.74	0.315	0.55	1/4-20UNC	F05
1-1/2"	6.19	4.45	2.65	9.88	1.57	1.91	2.76	0.53	0.88	0.374	0.63	5/16-18UNC	F07
2"	6.62	4.45	2.91	9.88	1.97	2.38	2.76	0.53	0.88	0.374	0.63	5/16-18UNC	F07
2-1/2"	8.78	6.22	3.39	15.50	2.32	2.87	CONSULT FACTORY						
3"	10.00	7.13	4.45	15.50	2.99	3.50	4.02	1.75	2.76	0.669	1.10	1/2-13UNC	F10
4"	17.00	9.41	5.53	22.50	3.82	4.50	4.92	2.03	2.91	1.024	1.34	1/2-13UNC	F12

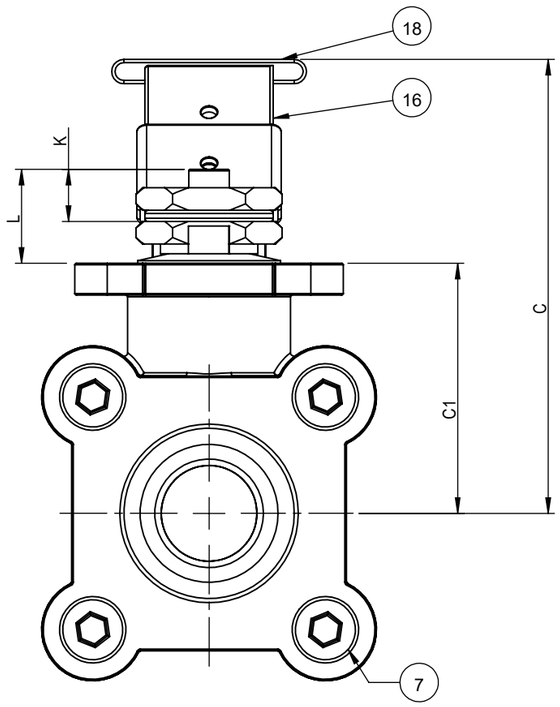

P-TYPE UNI-DIRECTION

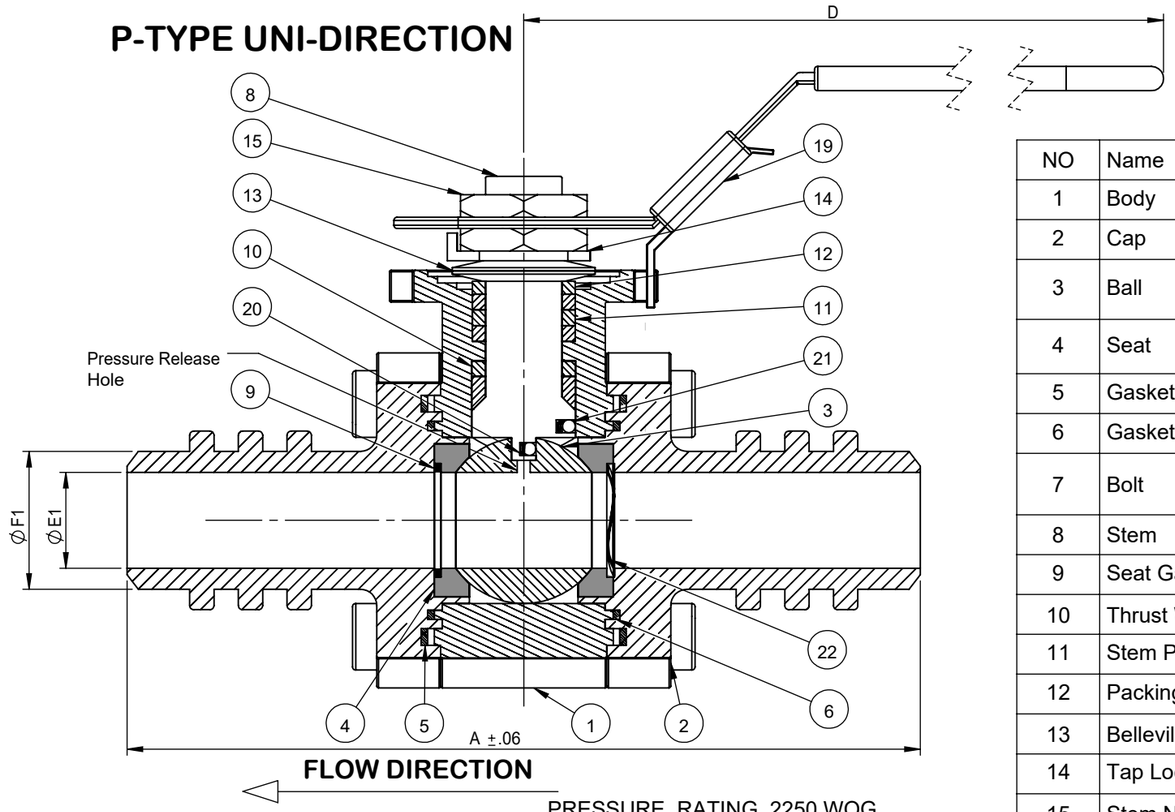

PRESSURE RATING 2250 WOG

ANSI / FCI LEAKGE CLASS	SHUT-OFF CLASS V/VI
SHELL TEST @ 2250 PSI	ASME B16.34
PRESSURE TEMPERATURE RATING	ASME B16.34
END CONNECTION	ASME B16.11
JOINT STRENGTH	ASME B16.34
WALL THICKNESS	ASME B16.34
BASIC DESIGN	ASME B16.34

NO	Name	Material
1	Body	ASTM A216 WCB
2	Cap	ASTM A216 WCB
3	Ball	Forged SS316 Carbide Coated
4	Seat	Forged SS316 Carbide Coated
5	Gasket (Inner)	Graphite
6	Gasket (Outer)	Graphite
7	Bolt	EN3506 A2-70/ A193 B8
8	Stem	17-4PH
9	Seat Gasket	Graphoil
10	Thrust Washer	NIT60
11	Stem Packing	Graphite
12	Packing Follower	SS304
13	Belleville Washer	SS301
14	Tap Lock Washer	SS304
15	Stem Nut	SS304
16	Handle	SS304
17	Stopper	SS304
18	Plastic Cover	Plastic
19	Locking Device	SS304
20	Anti-Static Spring	SS301
21	Anti-Static Ball	SS316
22	Wavo Spring	17-7/Inconel/A286

Drawn by : M	Date : November 9, 2018	Scale : Not To Scale	Rev : 0
Checked by : M	Date : November 9, 2018	Unit : Inch	Sheet : xxx
Approved by : M	Date : November 9, 2018	Material : See Notes	

Drawing Title: BW 1/2"FULL BORE BALL VALVE

Drawing No.: DS-HPF43-CS-1-MGG-L-XXX-B1/B3-C5/C6

FLO-TITE™
4815 W. 5th Street
Lumberton, NC 28358
Website: www.flotite.com
Tel : 910-738-8904
Fax : 910-738-9112
E-mail : flotite@flotite.com

REVIEW ALL STANDARD SOFT PARTS FOR APPLICATION COMPATIBILITY