Tri-Pro Series	3000WOG	WCB	TFM Seat
FIRE SAFE API 607-7			SIZE- 1/4"

HPF42-CS-2-F-G-G-L-8

Scan me

QR CODE

Actuator ISO Mounting Flange (F04)

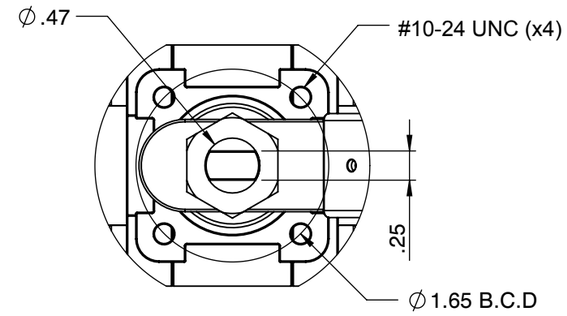

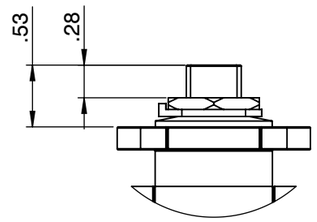

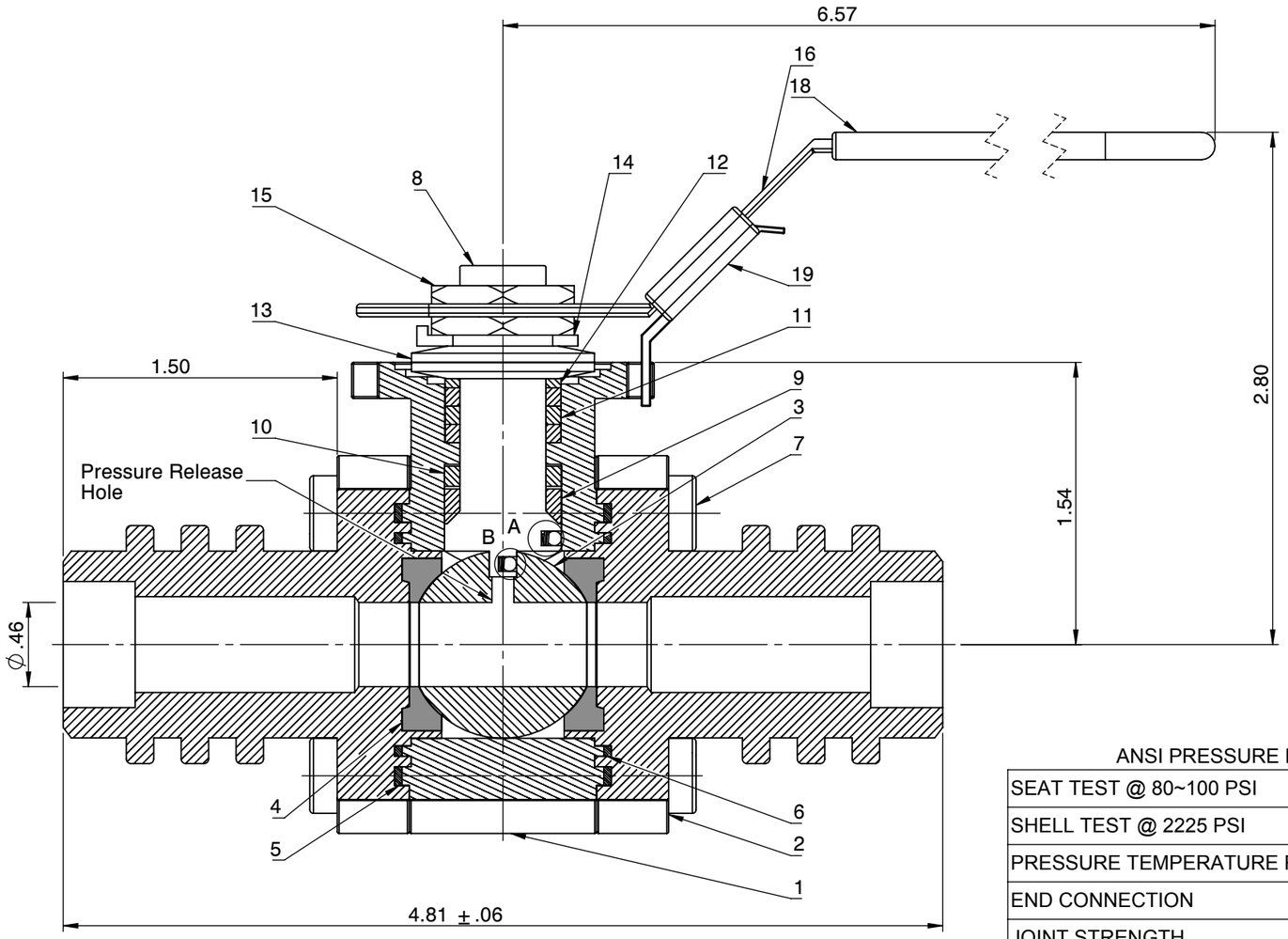

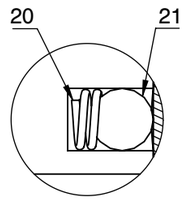

DETAIL : A
DETAIL : B

NO	Name	Material
1	Body	ASTM A216 WCB
2	Cap	ASTM A216 WCB
3	Ball	ASTM A351 CF8
4	Seat	TFM
5	Gasket (Inner)	TFM
6	Gasket (Outer)	Graphite
7	Bolt	EN3506 A2-70/ A193 B8
8	Stem	17-4PH
9	Thrust Bearing	Carbon PTFE
10	Thrust Washer	50%SS PTFE
11	Stem Packing	TFM
12	Packing Follower	SS304
13	Belleville Washer	SS301
14	Tap Lock Washer	SS304
15	Stem Nut	SS304
16	Handle	SS304
17	Stopper	SS304
18	Plastic Cover	Plastic
19	Locking Device	SS304
20	Anti-Static Spring	SS301
21	Anti-Static Ball	SS316

ANSI PRESSURE RATING CLASS 600/3000 WOG

SEAT TEST @ 80~100 PSI	ASME B16.34
SHELL TEST @ 2225 PSI	ASME B16.34
PRESSURE TEMPERATURE RATING	ASME B16.34
END CONNECTION	ASME B16.11
JOINT STRENGTH	ASME B16.34
WALL THICKNESS	ASME B16.34
BASIC DESIGN	ASME B16.34

FOR CERTIFIED DRAWINGS CONSULT FACTORY	Drawn by : M	Date : November 9, 2018	Scale : Not To Scale	Rev : 0	Drawing Title:	SW 1/4"FULL BORE BALL VALVE
	Checked by : M	Date : November 9, 2018	Unit : Inch	Sheet : xxx	Drawing No.:	DT-HPF42CS2FGGL-8
	Approved by : M	Date : November 9, 2018	Material : See Notes			

FLO-TITE™
4815 W. 5th Street
Lumberton, NC 28358
Website: www.flotite.com
Tel : 910-738-8904
Fax : 910-738-9112
E-mail : flotite@flotite.com

REVIEW ALL STANDARD SOFT PARTS FOR APPLICATION COMPATIBILITY