| Tri-Pro Series | 2250WOG | 316SS | TFM Seat |
|---|---|---|---|
| FIRE SAFE API 607-7 | | | SIZE 2-1/2" |

**HPF51-SS-1-F-G-G-L-65**

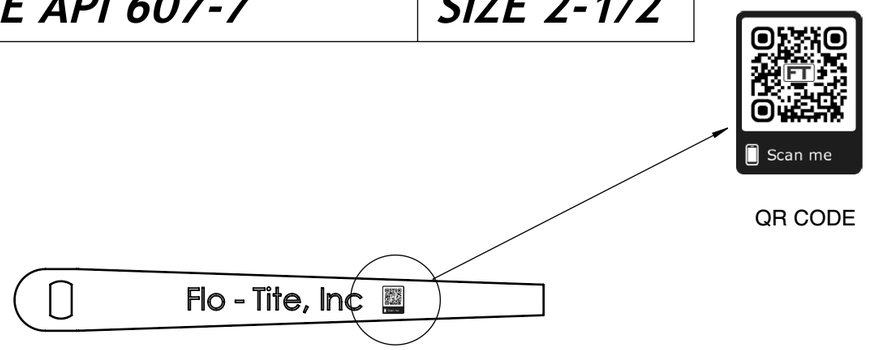


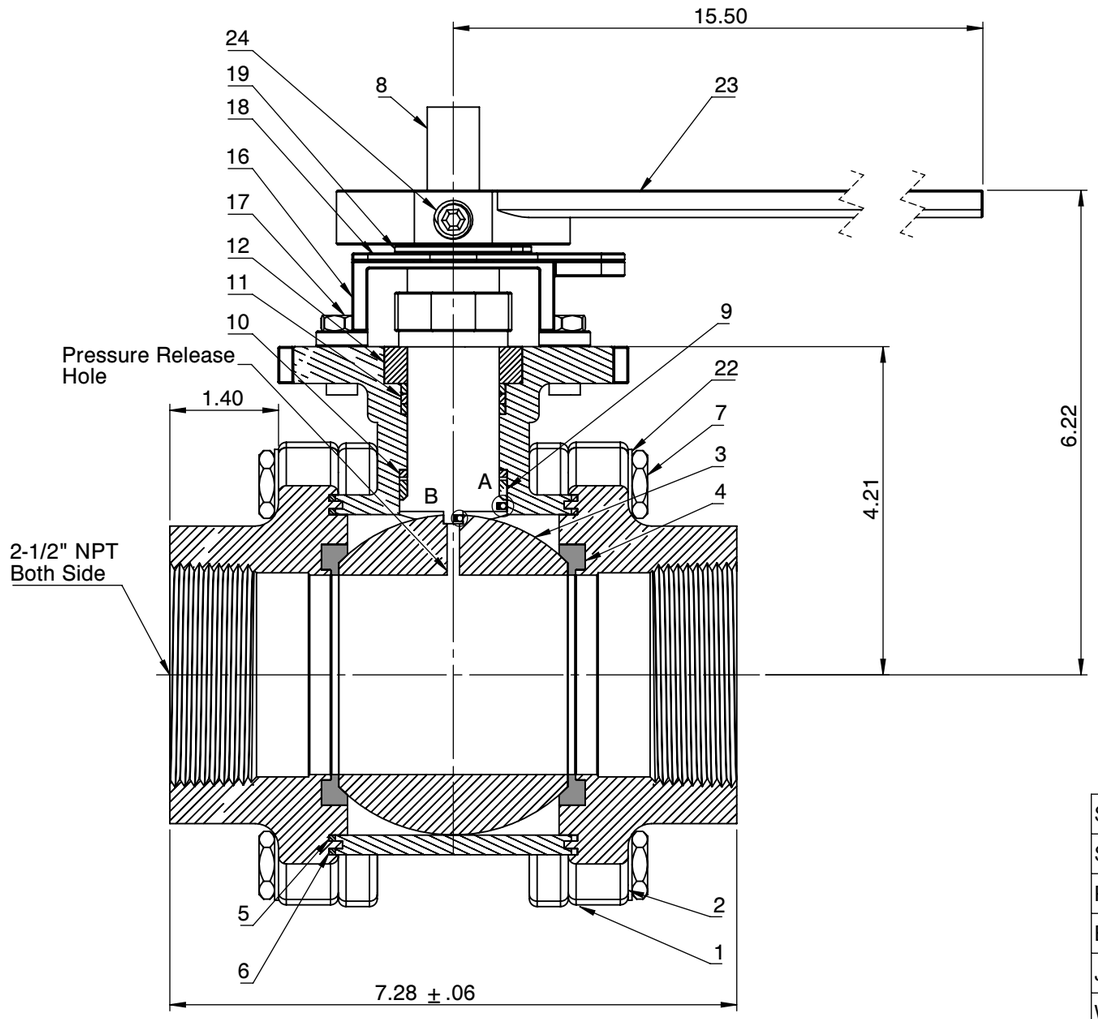


Actuator ISO Mounting Flange (F10)

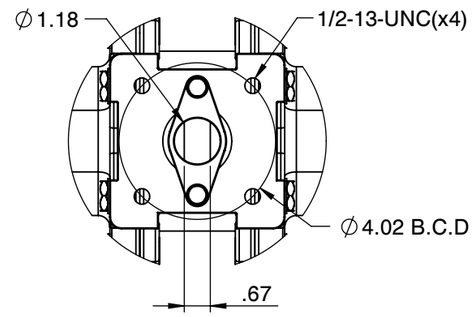


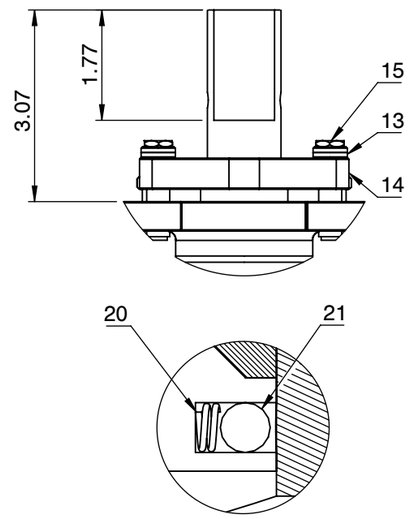


DETAIL : A
DETAIL : B

| NO | Name | Material |
|---|---|---|
| 1 | Body | ASTM A351 CF8M |
| 2 | Cap | ASTM A351 CF8M |
| 3 | Ball | ASTM A351 CF8M |
| 4 | Seat | TFM |
| 5 | Gasket (Inner) | TFM |
| 6 | Gasket (Outer) | Graphite |
| 7 | Bolt | EN3506 A2-70/ A193 B8 |
| 8 | Stem | 17-4PH |
| 9 | O-Ring | Viton |
| 10 | Thrust Washer | 50%SS PTFE |
| 11 | Stem Packing | Graphite |
| 12 | Packing Follower | SS304 |
| 13 | Belleville Washer | SS301 |
| 14 | Packing Gland | SS304 |
| 15 | Gland Bolts | SS304 |
| 16 | Stop Housing | SS304 |
| 17 | Housing Bolts | SS304 |
| 18 | Travel Stopper | Plastic |
| 19 | Snap Ring | SS304 |
| 20 | Anti-Static Spring | SS301 |
| 21 | Anti-Static Ball | SS316 |
| 22 | Spring Washers | SS304 |
| 23 | Handle | Ductile Iron |
| 24 | Set screw | SS304 |

ANSI PRESSURE RATING CLASS 600/2250 WOG

| | |
|---|---|
| SEAT TEST @ 80~100 PSI | ASME B16.34 |
| SHELL TEST @ 2175 PSI | ASME B16.34 |
| PRESSURE TEMPERATURE RATING | ASME B16.34 |
| END CONNECTION | ASME B16.11 |
| JOINT STRENGTH | ASME B16.34 |
| WALL THICKNESS | ASME B16.34 |
| BASIC DESIGN | ASME B16.34 |

| | | | | |
|---|---|---|---|---|
| FOR CERTIFIED DRAWINGS CONSULT FACTORY | Drawn by : M | Date : November 9, 2018 | Scale : Not To Scale | Rev : 0 |
| | Checked by : M | Date : November 9, 2018 | Unit : Inch | Sheet : xxx |
| | Approved by : M | Date : November 9, 2018 | Material : See Notes | |

Drawing Title: NPT 2-1/2"FULL BORE BALL VALVE

Drawing No.: DT-HPF51SS1FGGL-65

FLO-TITE™
4815 W. 5th Street
Lumberton, NC 28358
Website: www.flotite.com
Tel : 910-738-8904
Fax : 910-738-9112
E-mail : flotite@flotite.com

REVIEW ALL STANDARD SOFT PARTS FOR APPLICATION COMPATIBILITY