Tri-Pro Series	2250WOG	316SS	TFM Seat
FIRE SAFE API 607-7			SIZE 2-1/2"

HPS52-SS-2-F-G-G-L-65

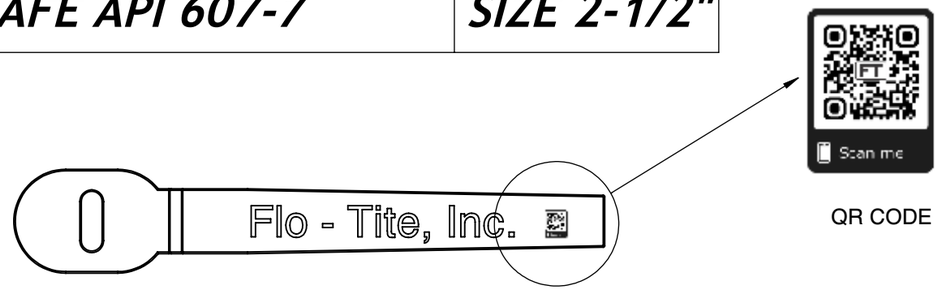

Actuator ISO Mounting Flange (F07)

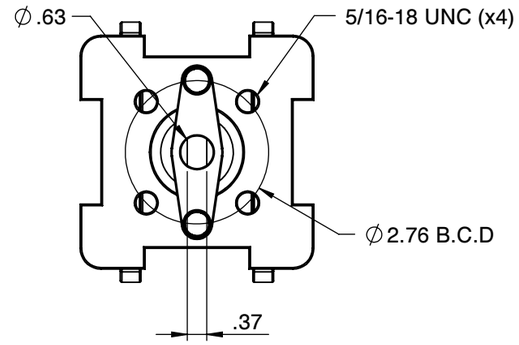

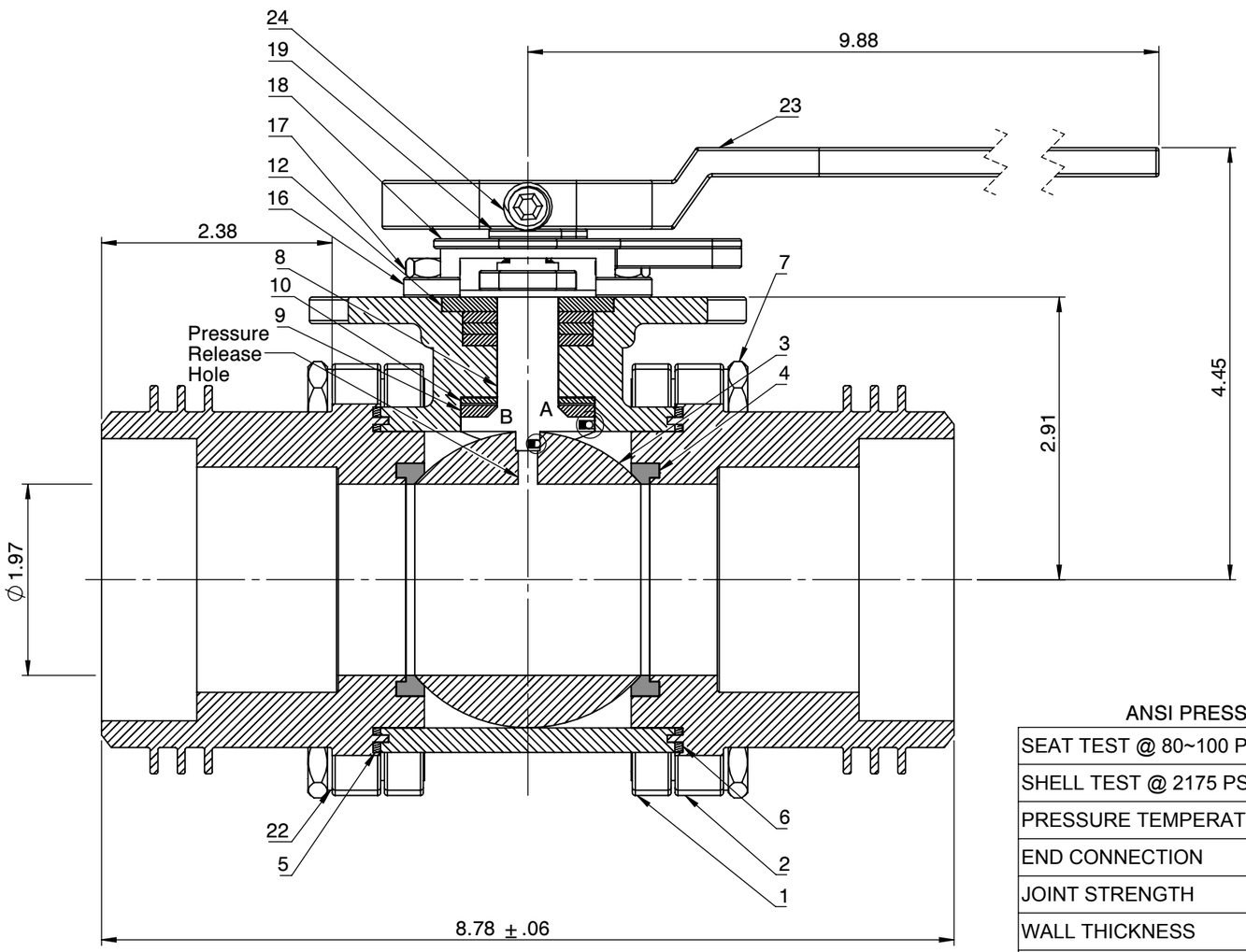

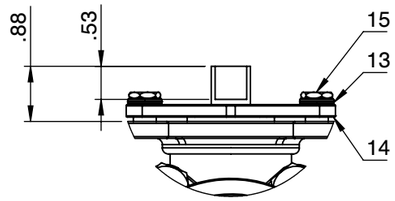

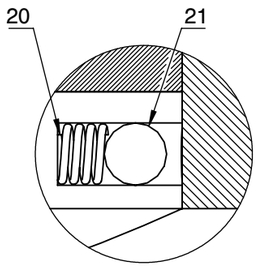

DETAIL : A
DETAIL : B

NO	Name	Material
1	Body	ASTM A351 CF8M
2	Cap	ASTM A351 CF8M
3	Ball	ASTM A351 CF8M
4	Seat	TFM
5	Gasket (Inner)	TFM
6	Gasket (Outer)	Graphite
7	Bolt	EN3506 A2-70/ A193 B8
8	Stem	17-4PH
9	O-Ring	Viton
10	Thrust Washer	50%SS PTFE
11	Stem Packing	Graphite
12	Packing Follower	SS304
13	Belleville Washer	SS301
14	Packing Gland	SS304
15	Gland Bolts	SS304
16	Stop Housing	SS304
17	Housing Bolts	SS304
18	Travel Stopper	SS304
19	Snap Ring	Nickel Plated C.S.
20	Anti-Static Spring	SS301
21	Anti-Static Ball	SS316
22	Spring Washers	SS304
23	Handle	Ductile Iron
24	Set screw	SS304

ANSI PRESSURE RATING CLASS 600/2250 WOG

SEAT TEST @ 80~100 PSI	ASME B16.34
SHELL TEST @ 2175 PSI	ASME B16.34
PRESSURE TEMPERATURE RATING	ASME B16.34
END CONNECTION	ASME B16.25
JOINT STRENGTH	ASME B16.34
WALL THICKNESS	ASME B16.34
BASIC DESIGN	ASME B16.34

FOR CERTIFIED DRAWINGS CONSULT FACTORY	Drawn by : M	Date : November 9, 2018	Scale : Not To Scale	Rev : 0
	Checked by : M	Date : November 9, 2018	Unit : Inch	Sheet : xxx
	Approved by : M	Date : November 9, 2018	Material : See Notes	

Drawing Title: SW 2-1/2" REDUCED BORE BALL VALVE

Drawing No.: DT-HPS52SS2FGGL-65

FLO-TITE™
4815 W. 5th Street
Lumberton, NC 28358
Website: www.flotite.com
Tel : 910-738-8904
Fax : 910-738-9112
E-mail : flotite@flotite.com

REVIEW ALL STANDARD SOFT PARTS FOR APPLICATION COMPATIBILITY