Tri-Pro Series	2250WOG	316SS	TFM Seat
NON FIRE SAFE			SIZE 1"

HPS53-SS-3-F-F-F-L-25

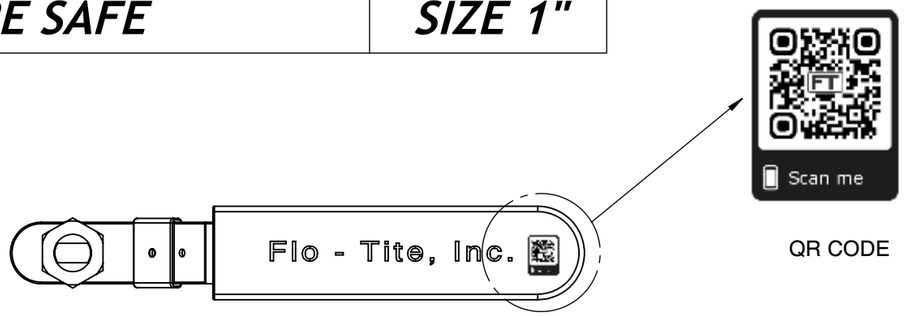

QR CODE

Actuator ISO Mounting Flange (F04)

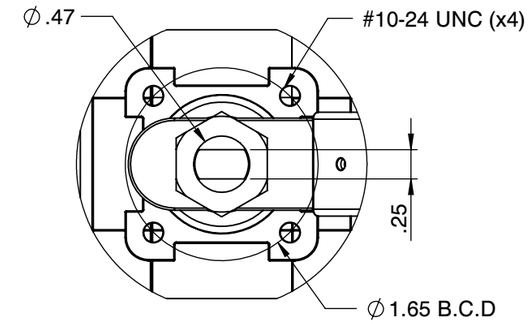

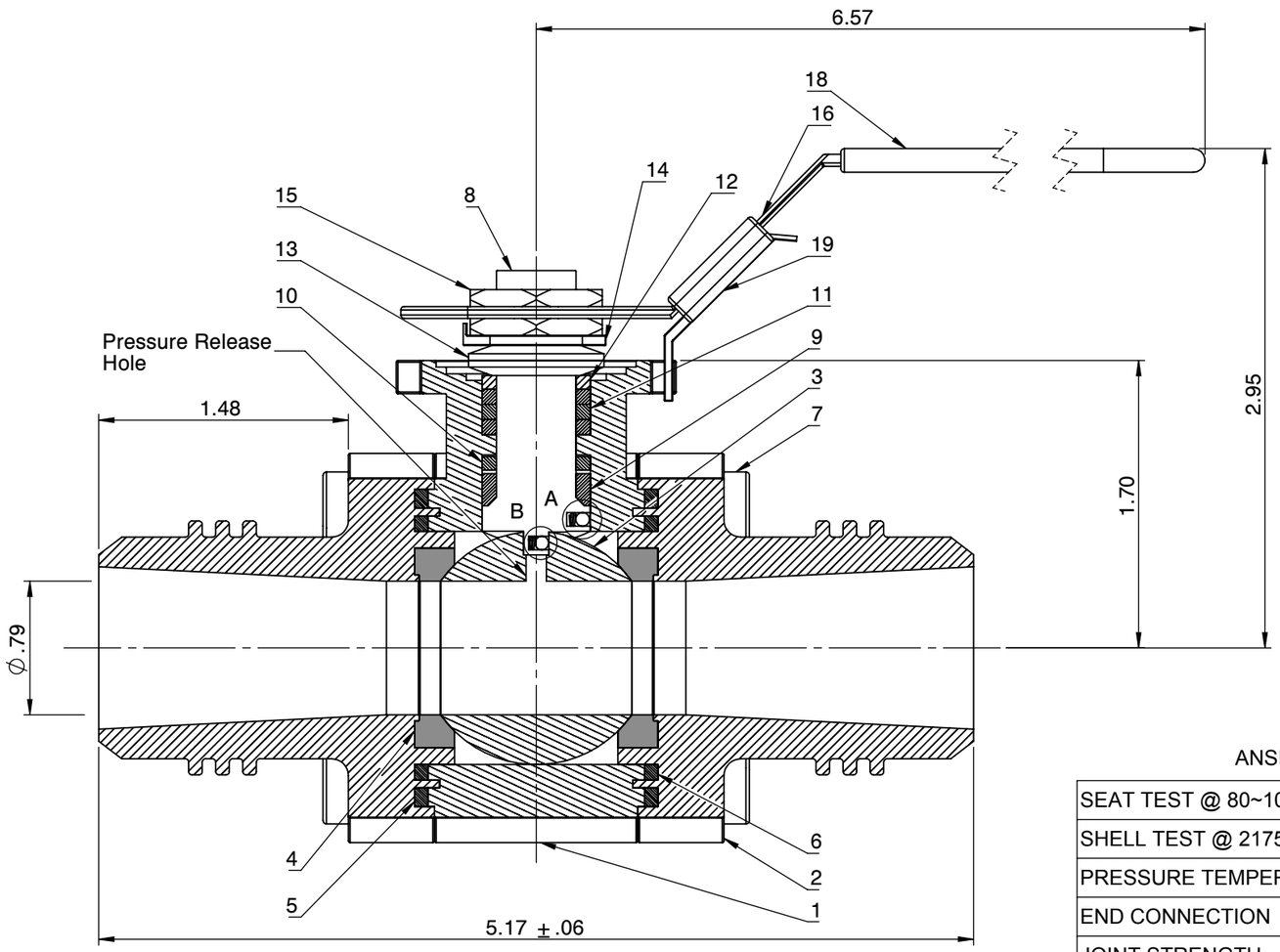

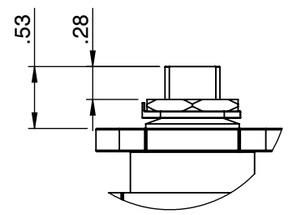

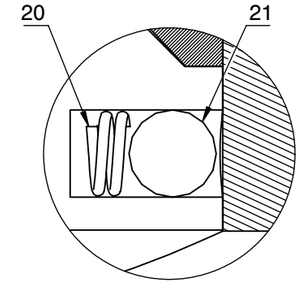

DETAIL : A
DETAIL : B

NO	Name	Material
1	Body	ASTM A351 CF8M
2	Cap	ASTM A351 CF8M
3	Ball	ASTM A351 CF8M
4	Seat	TFM
5	Gasket (Inner)	TFM
6	Gasket (Outer)	TFM
7	Bolt	EN3506 A2-70/ A193 B8
8	Stem	17-4PH
9	Thrust Bearing	Carbon PTFE
10	Thrust Washer	50%SS PTFE
11	Stem Packing	Graphite
12	Packing Follower	SS304
13	Belleville Washer	SS301
14	Tap Lock Washer	SS304
15	Stem Nut	SS304
16	Handle	SS304
17	Stopper	SS304
18	Plastic Cover	Plastic
19	Locking Device	SS304
20	Anti-Static Spring	SS301
21	Anti-Static Ball	SS316

ANSI PRESSURE RATING CLASS 600/2250 WOG

SEAT TEST @ 80~100 PSI	ASME B16.34
SHELL TEST @ 2175 PSI	ASME B16.34
PRESSURE TEMPERATURE RATING	ASME B16.34
END CONNECTION	ASME B16.11
JOINT STRENGTH	ASME B16.34
WALL THICKNESS	ASME B16.34
BASIC DESIGN	ASME B16.34

FOR CERTIFIED DRAWINGS CONSULT FACTORY						
	Drawn by :	M	Date : November 9, 2018	Scale : Not To Scale	Rev : 0	Drawing Title: BW 1" REDUCED BORE BALL VALVE
	Checked by :	M	Date : November 9, 2018	Unit : Inch	Sheet : xxx	Drawing No.: DT-HPS53SS3FFFL-25
	Approved by :	M	Date : November 9, 2018	Material : See Notes		

FLO-TITE™
4815 W. 5th Street
Lumberton, NC 28358
Website: www.flotite.com
Tel : 910-738-8904
Fax : 910-738-9112
E-mail : flotite@flotite.com

REVIEW ALL STANDARD SOFT PARTS FOR APPLICATION COMPATIBILITY