Trans-Flo Series	ANSI 150	316SS	TFM Seat	FULL PORT	FLANGED END	MPF15-SS-T-F-F-G-L-100
			SIZE 4"			

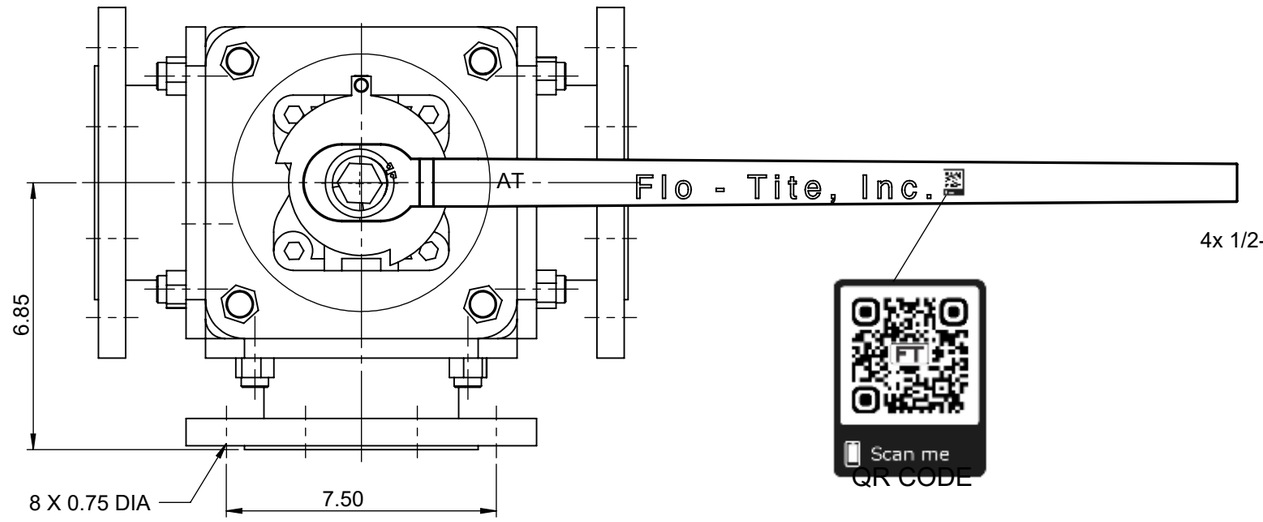

Scan me
QR CODE

Actuator ISO Mounting Flange (F12)

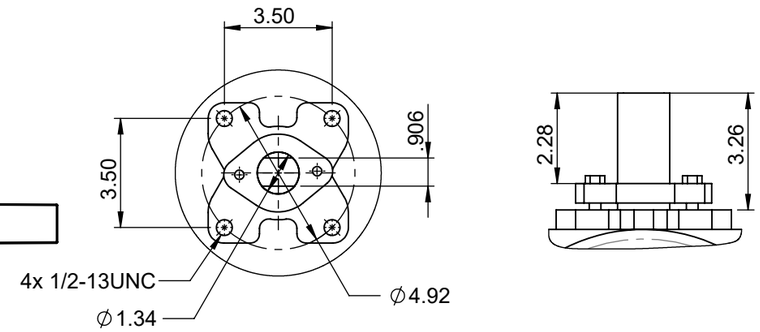

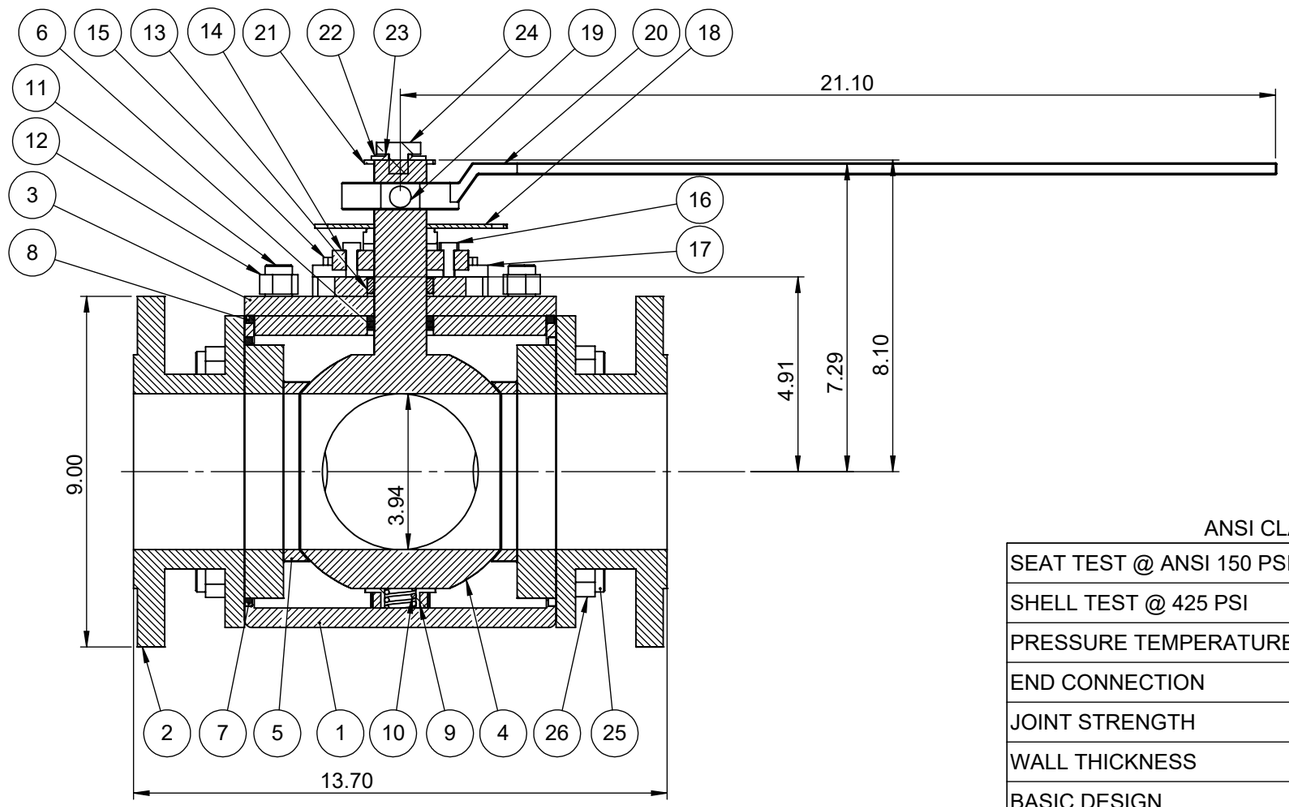

NO	Name	Material	Qty
1	Body	ASTM A351 CF8M	1
2	End Caps	ASTM A351 CF8M	3
3	Bonnet	ASTM A351 CF8M	1
4	Ball & Stem	ASTM A351 CF8M	1
5	Seats	TFM	3
6	Stem Packing	TFM/Graphite *	1
7	Body Gaskets	50/50/Graphite *	3
8	Bonnet Gasket	50/50/Graphite *	1
9	Thrust Bearing	50/50/PEEK *	1
10	Anti-Static Springs	SS304	1
11	Bonnet Bolts	ASTM A193 B8	set
12	Bonnet Nuts	ASTM A194 Gr. 8	set
13	Packing Follower	SS304	1
14	Packing Gland	ASTM A351 CF8	1
15	Gland Bolts	SS304	2
16	Housing Bolts	SS304	4
17	Stop Housing	ASTM A351 CF8	1
18	Travel Stop	SS304	1
19	Handle Screw	SS304	1
20	Handle	Ductile Iron	1
21	Snap Ring	Plated Steel	1
22	Port Sign	SS304	1
23	Plain Washer	SS304	1
24	Sign Screw	SS304	1
25	Body Studs	ASTM A193 B8	set
26	Body Nuts	ASTM A194 Gr. 8	set

ANSI CLASS 150

SEAT TEST @ ANSI 150 PSI	ASME B16.34
SHELL TEST @ 425 PSI	ASME B16.34
PRESSURE TEMPERATURE RATING	ASME B16.34
END CONNECTION	ASME B16.25
JOINT STRENGTH	ASME B16.34
WALL THICKNESS	ASME B16.34
BASIC DESIGN	ASME B16.34

Part ID	Drawn by : M	Date : November 9, 2018	Scale : Not To Scale	Rev : 0	Drawing Title:	BW 4"FULL BORE BALL VALVE
MPF15SSTFFGL100	Checked by : M	Date : November 9, 2018	Unit : Inch	Sheet : xxx	Drawing No.:	DT-MPF15-SS-T-FFG-L-100
	Approved by : M	Date : November 9, 2018	Material : See Notes			

FLO-TITE™
4815 W. 5th Street
Lumberton, NC 28358
Website: www.flotite.com
Tel : 910-738-8904
Fax : 910-738-9112
E-mail : flotite@flotite.com

REVIEW ALL STANDARD SOFT PARTS FOR APPLICATION COMPATIBILITY

* Optional Items