Trans-Flo Series	ANSI 300	316SS	TFM Seat	FULL PORT	FLANGED END
			SIZE 1/2"		

MPF30-SS-T-FFG-L-015

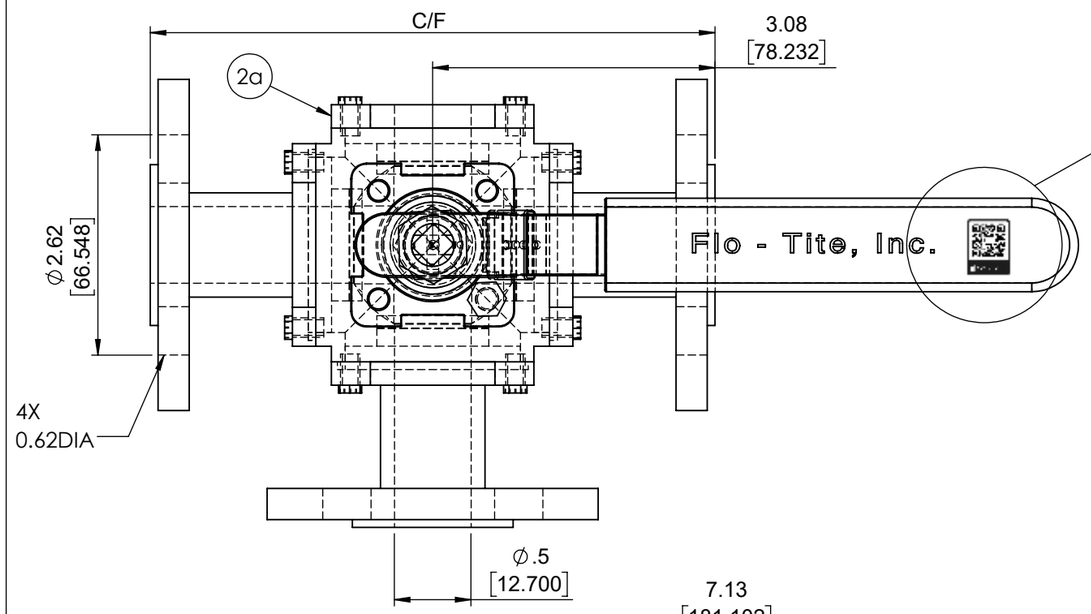

QR CODE

Actuator ISO Mounting Flange (F05)

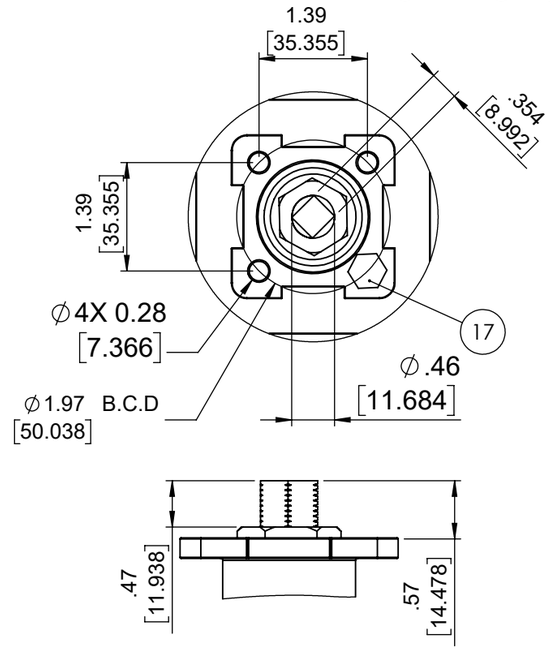

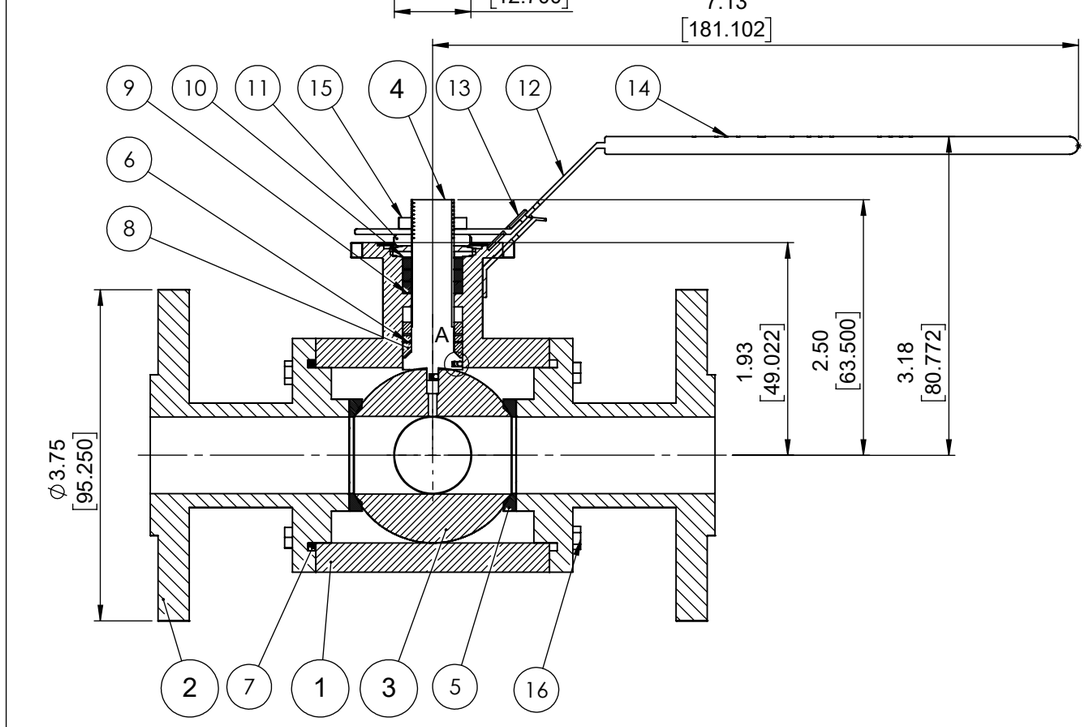

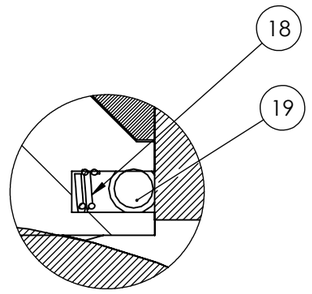

DETAIL : A
DETAIL : B

NOTE: FOR ALL THE FLOW PLANS,
PLEASE CONSULT CATALOG 90 - 22 PAGE #15

NO	Name	Material	Qty
1	Body	ASTM A351 CF8M	1
2	End Caps	ASTM A351 CF8M	3
2a	Back Cover	ASTM A351 CF8M	1
3	Ball	SS316	1
4	Stem	SS316	1
5	Seats	TFM	4
6	Stem Packing	TFM/Graphite *	1
7	Body Gaskets	50/50/Graphite *	4
8	Thrust Washer	50/50	1
9	Packing Follower	SS304	1
10	Belleville Washer	SS304	2
11	Stem Nut	SS304	1
12	Handle	SS304	1
13	Handle Lock	SS304	1
14	Handle Sleeve	Plastic	1
15	Handle Nut	SS304	1
16	Body Bolts	ASTM A193 B8	16
17	Handle Stop Bolt	SS304	1
18	Anti-Static Springs	SS316	2
19	Anti-Static Balls	SS316	2

ANSI CLASS 300

ANSI / FCI LEAKGE CLASS	SHUT-OFF CLASS V/VI
SHELL TEST @ 1125 PSI	ASME B16.34
PRESSURE TEMPERATURE RATING	ASME B16.34
END CONNECTION	ASME B16.11
JOINT STRENGTH	ASME B16.34
WALL THICKNESS	ASME B16.34
BASIC DESIGN	ASME B16.34

Part ID	Drawn by : M	Date : November 9, 2018	Scale : Not To Scale	Rev : 0
MPF30SSTFFGL015	Checked by : M	Date : November 9, 2018	Unit : Inch	Sheet : xxx
	Approved by : M	Date : November 9, 2018	Material : See Notes	

Drawing Title: FLANGED 1/2" FULL BORE BALL VALVE

Drawing No.: DT-MPF30-SS-T-FFG-L-015

FLO-TITE™
4815 W. 5th Street
Lumberton, NC 28358
Website: www.flotite.com
Tel : 910-738-8904
Fax : 910-738-9112
E-mail : flotite@flotite.com

* Optional Items

REVIEW ALL STANDARD SOFT PARTS FOR APPLICATION COMPATIBILITY