Trans-Flo Series	ANSI 300	316SS	TFM Seat	FULL PORT	FLANGED END
			SIZE 2"		

MPF30-SS-T-FFG-L-050

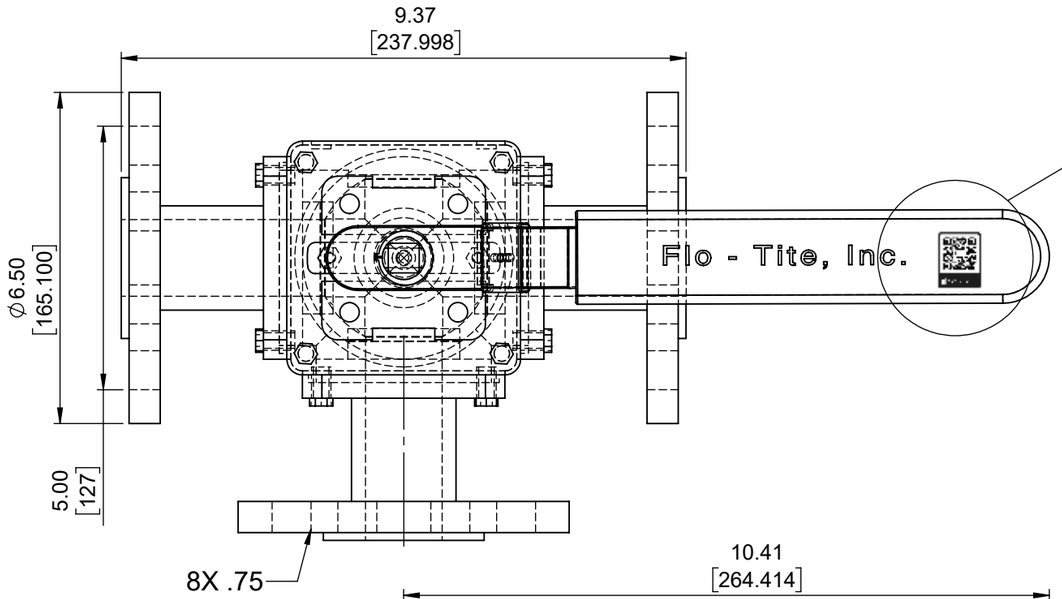

QR CODE

Actuator ISO Mounting Flange (F07)

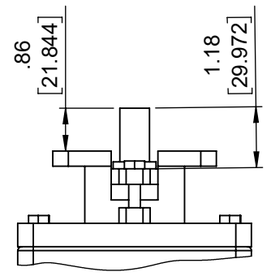

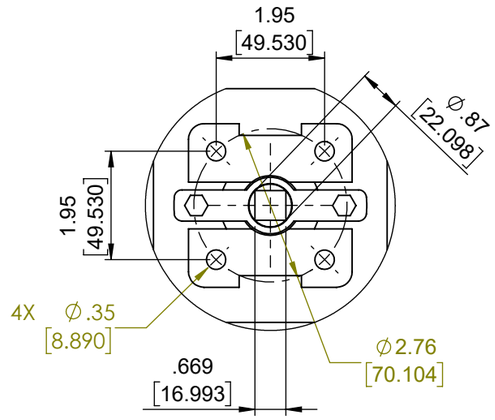

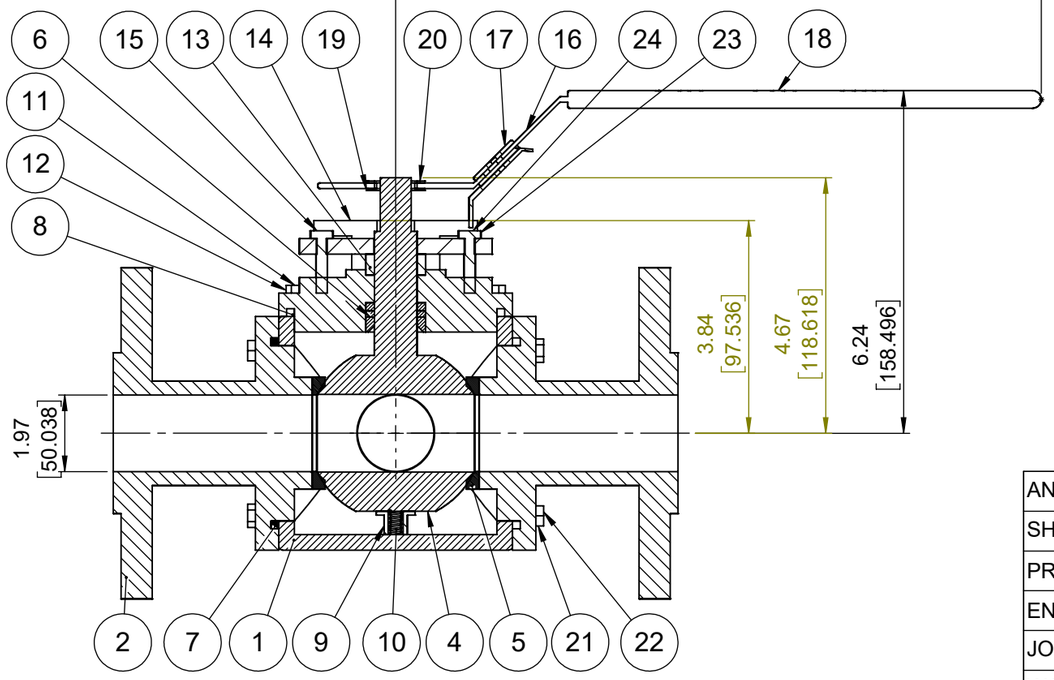

NOTE: FOR ALL THE FLOW PLANS,
PLEASE CONSULT CATALOG 90 - 22 PAGE #15

NO	Name	Material	Qty
1	Body	ASTM A351 CF8M	1
2	End Caps	ASTM A351 CF8M	3
3	Bonnet	ASTM A351 CF8M	1
4	Ball & Stem	ASTM A351 CF8M	1
5	Seats	TFM	3
6	Stem Packing	TFM/Graphite *	1
7	Body Gaskets	50/50/Graphite *	3
8	Bonnet Gasket	50/50/Graphite *	1
9	Thrust Bearing	50/50/PEEK *	1
10	Anti-Static Springs	SS304	1
11	Bonnet Bolts	ASTM A193 B8	4
12	Bonnet Nuts	ASTM A194 Gr. 8	4
13	Packing Follower	SS304	1
14	Packing Gland	SS304	1
15	Gland Bolts	SS304	2
16	Handle	SS304	1
17	Handle Lock	SS304	1
18	Handle Sleeve	Plastic	1
19	First Snap Ring	Plated Steel	1
20	Second Snap Ring	Plated Steel	1
21	Body Studs	ASTM A193 B8	12
22	Body Nuts	ASTM A194 Gr. 8	12
23	Handle Stop Nuts	SS304	1
24	Handle Stop Bolts	SS304	1

ANSI CLASS 300

ANSI / FCI LEAKGE CLASS	SHUT-OFF CLASS V/VI
SHELL TEST @ 1125 PSI	ASME B16.34
PRESSURE TEMPERATURE RATING	ASME B16.34
END CONNECTION	ASME B16.11
JOINT STRENGTH	ASME B16.34
WALL THICKNESS	ASME B16.34
BASIC DESIGN	ASME B16.34

Part ID	Drawn by : M	Date : November 9, 2018	Scale : Not To Scale	Rev : 0
MPF30SSTFFGL050	Checked by : M	Date : November 9, 2018	Unit : Inch	Sheet : xxx
	Approved by : M	Date : November 9, 2018	Material : See Notes	

Drawing Title: FLANGED 2" FULL BORE BALL VALVE

Drawing No.: DT-MPF30-SS-T-FFG-L-050

FLO-TITE™
4815 W. 5th Street
Lumberton, NC 28358
Website: www.flotite.com
Tel : 910-738-8904
Fax : 910-738-9112
E-mail : flotite@flotite.com

REVIEW ALL STANDARD SOFT PARTS FOR APPLICATION COMPATIBILITY

* Optional Items